Parts List			
Qty	Part Number	Material	Mass
1	2026-02-11-17-26-22-045	Steel	397.49 g

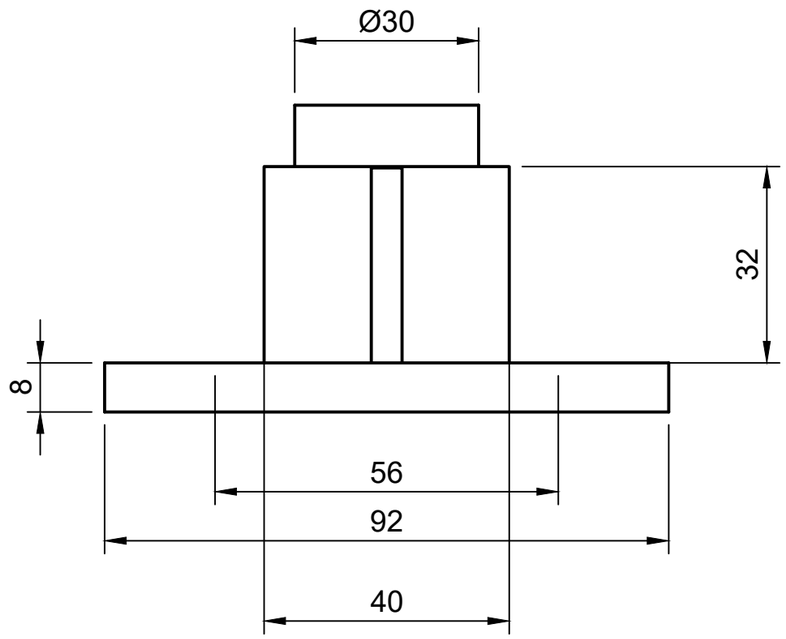

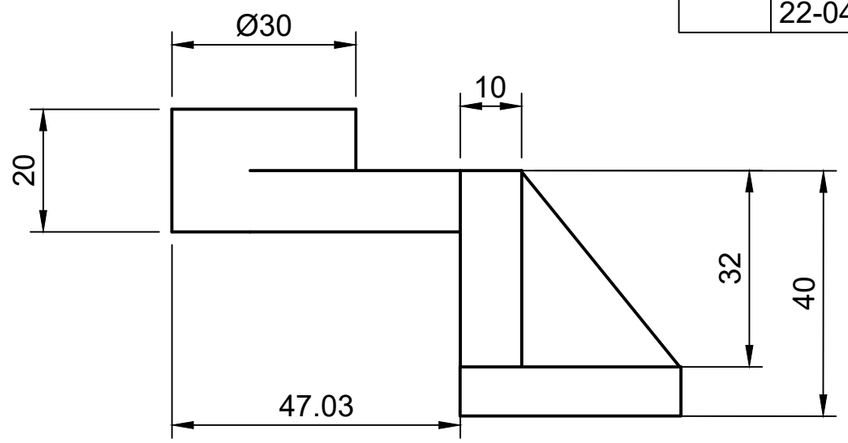

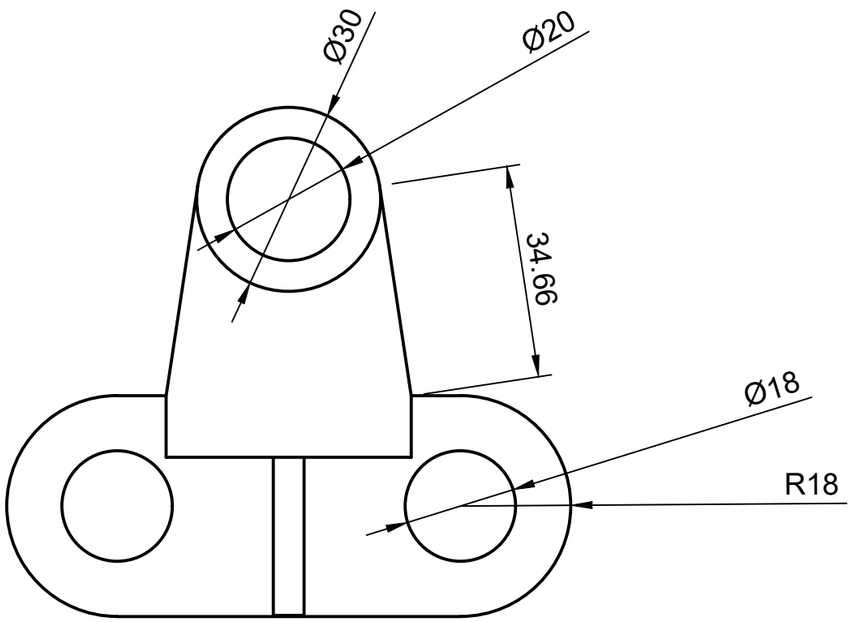

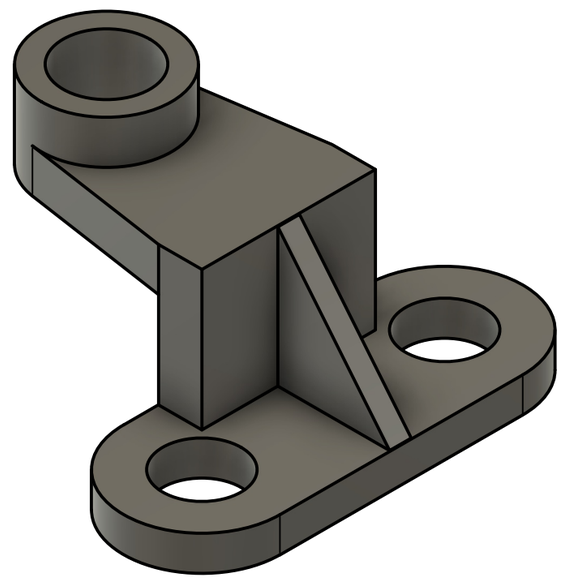

Dept. CSE	Technical reference 212225040230	Created by MEGALA M S	Approved by DR.SARAVANA.M.P
		Document type SKETCH	Document status
		Title EX:4:CREATA A 3D SOLID MODEL FROM ISOMETRIC DRAWING	DWG No.
			Rev. E.N / Date of issue 2/12/2026 / Sheet 1/1